Cambridge International **A Level**

Cambridge International Examinations
Cambridge International Advanced Level

CANDIDATE NAME

CENTRE NUMBER

CANDIDATE NUMBER

5858621285

PHYSICS **9702/51**

Paper 5 Planning, Analysis and Evaluation **May/June 2014**

1 hour 15 minutes

Candidates answer on the Question Paper.

No Additional Materials are required.

READ THESE INSTRUCTIONS FIRST

Write your Centre number, candidate number and name on all the work you hand in.
Write in dark blue or black pen.
You may use an HB pencil for any diagrams or graphs.
Do not use staples, paper clips, glue or correction fluid.
DO **NOT** WRITE IN ANY BARCODES.

Answer **all** questions.

Electronic calculators may be used.
You may lose marks if you do not show your working or if you do not use appropriate units.

At the end of the examination, fasten all your work securely together.
The number of marks is given in brackets [ ] at the end of each question or part question.

This document consists of **8** printed pages.

© UCLES 2014

CAMBRIDGE International Examinations

1 A ball rolls forwards and backwards on a curved track as shown in Fig. 1.1.

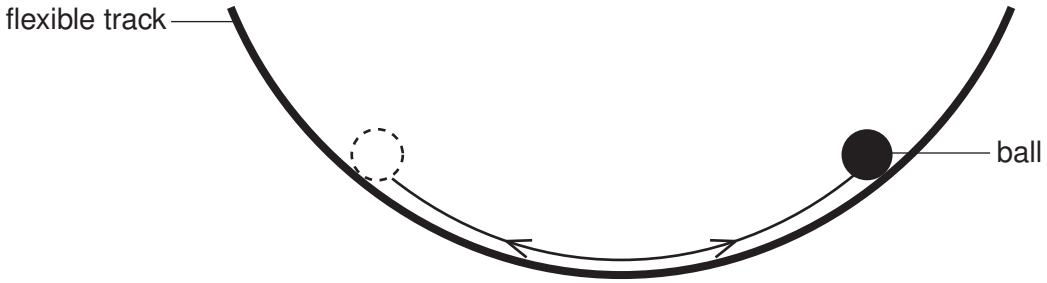

Fig. 1.1

It is suggested that the period T of the oscillations is related to the radius r of the ball and the radius of curvature C of the track by the relationship

$$T^2 = \frac{28\pi^2}{5g}(C - r)$$

where g is the acceleration of free fall.

You are provided with a flexible track. Design a laboratory experiment to test the relationship between T and r. Explain how your results could be used to determine a value for C. You should draw a diagram, on page 3, showing the arrangement of your equipment. In your account you should pay particular attention to

(a) the procedure to be followed,

(b) the measurements to be taken,

(c) the control of variables,

(d) the analysis of the data,

(e) the safety precautions to be taken.

[15]

© UCLES 2014

Diagram

.....

.....

.....

.....

.....

.....

.....

.....

.....

.....

.....

.....

.....

.....

.....

Defining the problem	Methods of data collection	Method of analysis	Safety considerations	Additional detail

2 A student is investigating a circuit containing an operational amplifier (op-amp).

The circuit is set up as shown in Fig. 2.1.

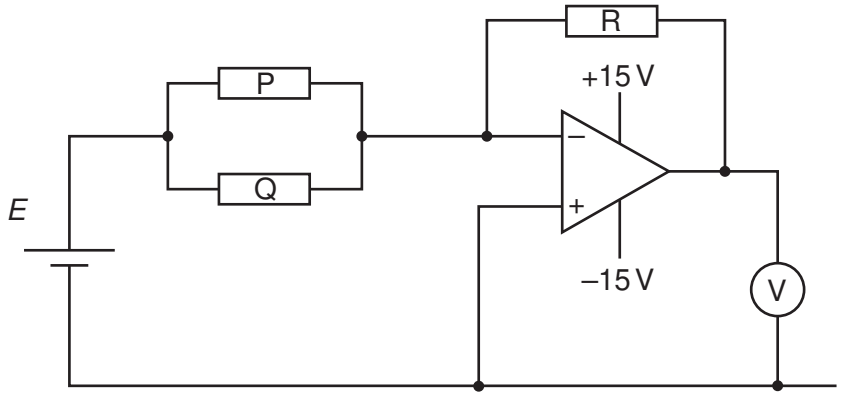

Fig. 2.1

The op-amp is connected to a +15 V and –15 V power supply.

An experiment is carried out to investigate how the reading V on the voltmeter varies with the resistance Q of resistor Q.

It is suggested that V and Q are related by the equation

$$V = -ER\left(\frac{1}{P} + \frac{1}{Q}\right)$$

where E is the e.m.f. of the cell, P is the resistance of resistor P and R is the resistance of resistor R.

(a) A graph is plotted of $\frac{V}{E}$ on the y-axis against $\frac{1}{Q}$ on the x-axis.

Determine expressions for the gradient and the y-intercept in terms of P and R.

gradient = ...

y-intercept = ...

[1]

(b) The e.m.f. E of the cell has a value of 1.6 ± 0.1 V.

Values of V and Q are given in Fig. 2.2.

$Q/10^3\ \Omega$	V/V	$\frac{1}{Q}/10^{-3}\,\Omega^{-1}$	$\frac{V}{E}$
0.15	–8.2 ± 0.1		
0.22	–6.0 ± 0.1		
0.33	–4.4 ± 0.1		
0.50	–3.3 ± 0.1		
0.66	–2.8 ± 0.1		
0.90	–2.4 ± 0.1		

Fig. 2.2

Calculate and record values of $\frac{1}{Q}/10^{-3}\,\Omega^{-1}$ and $\frac{V}{E}$ in Fig. 2.2.

Include the absolute uncertainties in $\frac{V}{E}$. [3]

(c) (i) Plot a graph of $\frac{V}{E}$ against $\frac{1}{Q}/10^{-3}\,\Omega^{-1}$. Include error bars for $\frac{V}{E}$. [2]

(ii) Draw the straight line of best fit and a worst acceptable straight line on your graph. Both lines should be clearly labelled. [2]

(iii) Determine the gradient of the line of best fit. Include the uncertainty in your answer.

gradient = ... [2]

© UCLES 2014

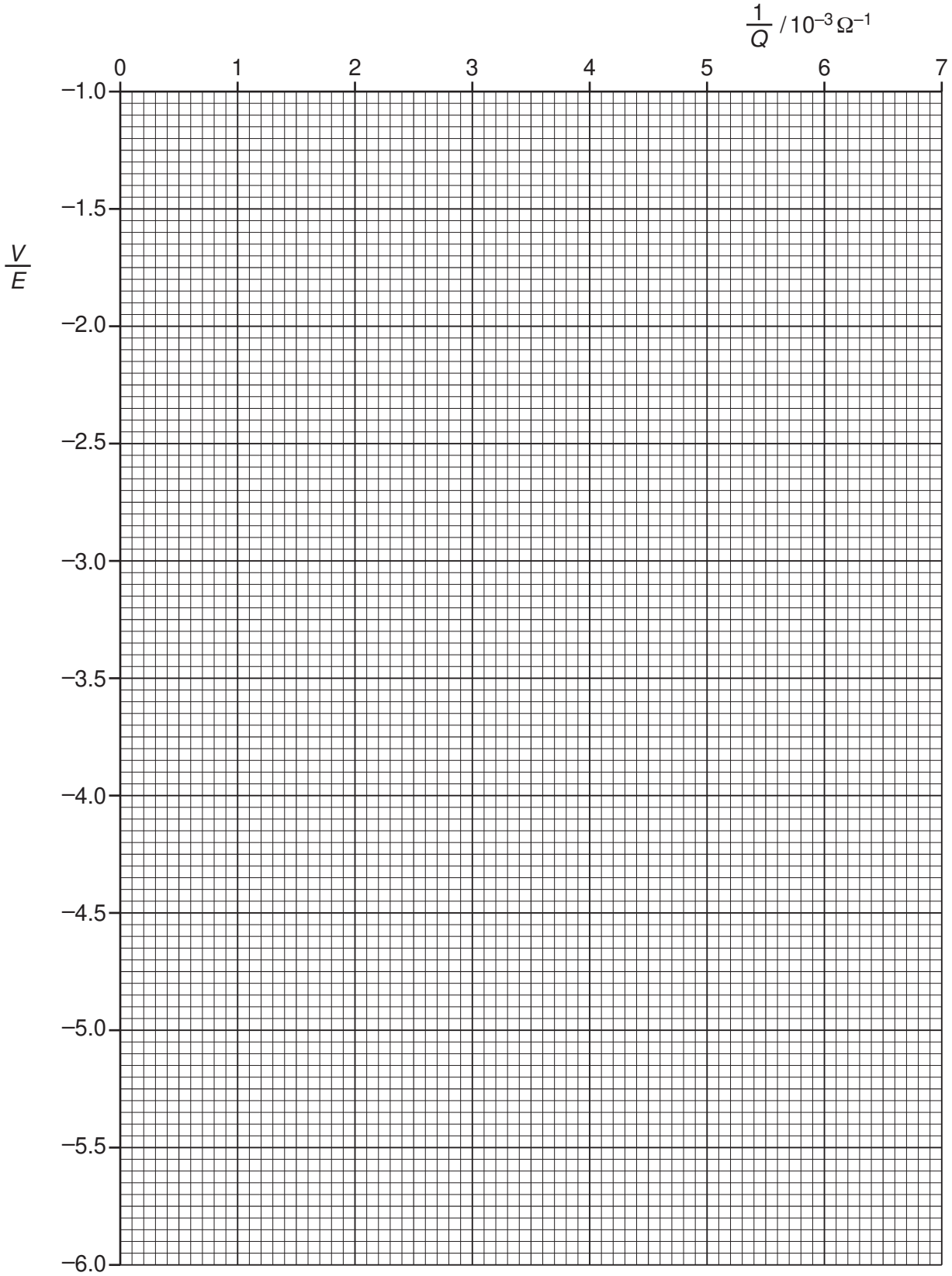
$\frac{1}{Q}$ / $10^{-3}\,\Omega^{-1}$
0
1
2
3
4
5
6
7
$\frac{V}{E}$
−1.0
−1.5
−2.0
−2.5
−3.0
−3.5
−4.0
−4.5
−5.0
−5.5
−6.0

© UCLES 2014

(iv) Determine the *y*-intercept of the line of best fit. Include the uncertainty in your answer.

y-intercept = ...[2]

(d) (i) Using your answers to **(c)(iii)** and **(c)(iv)**, determine the values of *P* and *R*. Include appropriate units.

P = ...

R = ...
[2]

(ii) Determine the percentage uncertainty in *P*.

percentage uncertainty = ...% [1]

Permission to reproduce items where third-party owned material protected by copyright is included has been sought and cleared where possible. Every reasonable effort has been made by the publisher (UCLES) to trace copyright holders, but if any items requiring clearance have unwittingly been included, the publisher will be pleased to make amends at the earliest possible opportunity.

Cambridge International Examinations is part of the Cambridge Assessment Group. Cambridge Assessment is the brand name of University of Cambridge Local Examinations Syndicate (UCLES), which is itself a department of the University of Cambridge.